ISSN 2395-1621

Harmonic Reduction Technique By Using Seven Level Inverter

#1Vishal Aher, #2Sachin Ghodke, #3Vaibhav Bhosale, #4Govind kakamure

1vishalpaher14gmail.com,
2sachinghodke75@gmail.com,
3bhosalevaibhav42@gmail.com,
4govindkakamure@gmail.com

#1234Department of Electrical Engineering

JSPM's, BSIOTR, Wagholi, Pune.

ABSTRACT

Multilevel inverter technology has emerged in recent times as a very important different in the area of high power medium-voltage energy control. In this paper, multilevel inverter is used to reduce the total harmonic distortion. A multilevel inverter consists of series Hbridge (single-phase, full-bridge) inverter units. By reducing the number of switches, the multilevel topology has been improved for high power applications. To improve the multilevel inverter topologies for high quality and high power applications by reducing the number of switches. Therefore an identical Hbridge module is used to improve manufacturability and modularity. Proposed method not only reduces the number of switches, besides it produces the variable AC voltage waveform without harmonics. The simulation is done by MATLAB Simulink software.

ARTICLE INFO

Article History

Received: 2nd May 2017

Received in revised form : 20th May 2017

Accepted: 26th May 2017

Published online : 27th May 2017

Keywords- Multilevel Inverter, H-Bridge, Seven Level, Total Harmonic Distortion.

I. INTRODUCTION

The multi-level inverter was first introduced in 1975. The three level converters was the first multi-level inverter introduced. A multilevel converter is a power electronic system that synthesizes a desired output voltage from several levels of dc voltages as inputs. With an increasing number of dc voltage sources, the converter output voltage waveform approaches a nearly sinusoidal waveform while using a fundamental frequency-switching scheme. The primary advantage of multi-level inverter is their small output voltage, results in higher output quality, lower harmonic component, better electromagnetic computability, and lower switching losses.

While many different multilevel inverter topologies have been proposed, the two most common topologies are the cascaded H-bridge inverter and its derivatives, and the Diode-clamped inverter . The main advantage of both topologies is that the rating of the switching devices is highly reduced to the rating of each cell. However, they have the drawback of the required large number of switching devices which equals 2(k-1) where k is the number of levels. This number is quite high and may increase the circuit complexity, and reduce its reliability and efficiency.

Cascaded H-bridge inverter has a modularized layout and the problem of the dc link voltage unbalancing does not occur, thus easily expanded to multilevel. Due to these advantages, cascaded H-bridge inverter has been widely applied to such applications as HVDC, SVC, stabilizers, and high power motor drives.

II. LITERATURE SURVEY

R. A. Mastromauro etc.& all[1] proposed In this paper, the DC to DC power converter integrates a DC to DC boost converter and a transformer to convert the output voltage of solar cell array in to two independent voltage source with multiple relationship this new seven level invertor is configured use in capacitor selection circuit and full bridge power converter connected in cascade the capacitor selection circuit convert the two output voltage source of DC to DC power converter in to three DC

voltage inverter and the full bridge power converter further converts this three level DC voltage in to a seven level AC voltage in this way the propose solar power generation system generates a sinusoidal output current that is in phase with the utility voltage and is fed in to the utility the silent features of the propose seven level inverter of are that only six power electronix voltage with high frequency at any time a proto type is developed and tested to verify the performance of this proper solar power generation system.

Z.Zhao etc.& all [2] proposed a new family of multilevel inverters has been presented and built in MATLAB-Simulink. It has the advantage of its reduced number of switching switches compared to conventional similar inverters. However, the high rating of its four main switches limits its usage to the medium voltage range. The modes of operation and switching strategy of the new topology are presented. A PWM algorithm is applied with the help of pulse generator and based on the theory of resultant has been applied for harmonic elimination of the new topology. Since the solution algorithm is based on solving polynomial equations, it has the advantage of finding all existed solutions, where the solution produces the lowest THD is selected. Other PWM methods and techniques are also expected to be successively applied to the proposed topology.

John.N.chiassion etc.& all[3] proposed a multilevel converter is a power electronic system that synthesizes a desired output voltage from several levels of dc voltages as inputs. With an increasing number of dc voltage sources, the converter output voltage waveform approaches a nearly sinusoidal waveform while using a fundamental frequency-switching scheme. The primary advantage of multi level inverter is their small output voltage, results in higher output quality, lower harmonic component, better electromagnetic computability, and lower switching losses.

III.BLOCK DIAGRAM

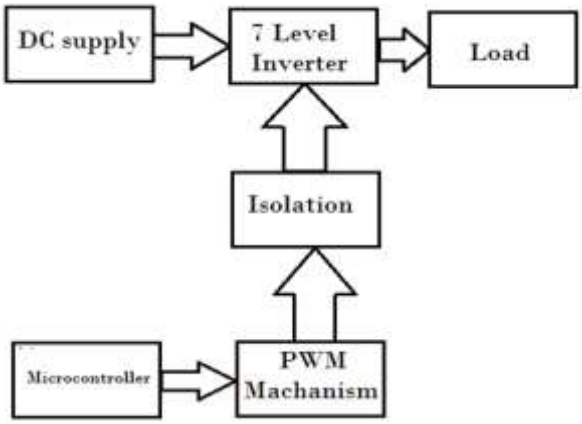

Fig 1. Block diagram

Our main objective is reduced number of switching switches compared to conventional similar inverters. However, the high rating of its four main switches limits its usage to the medium voltage range. The modes of operation and switching strategy of the new topology are presented.

To reduced number of switching switches compared to conventional similar inverters. However, the high rating of its four main switches limits its usage to the medium voltage range. The modes of operation and switching strategy of the new topology are presented.

To reduces the switching power loss and improves the power efficiency.

The 7-level version of the proposed topology is shown in Fig, where another dc supply, and two auxiliary switches, Q7 and Q8, are added while keeping the four main switches, Q1~Q4, unchanged. The corresponding output voltage waveform, load current, and gating signals are shown in Fig where the abovementioned modes of operation can also be realized.

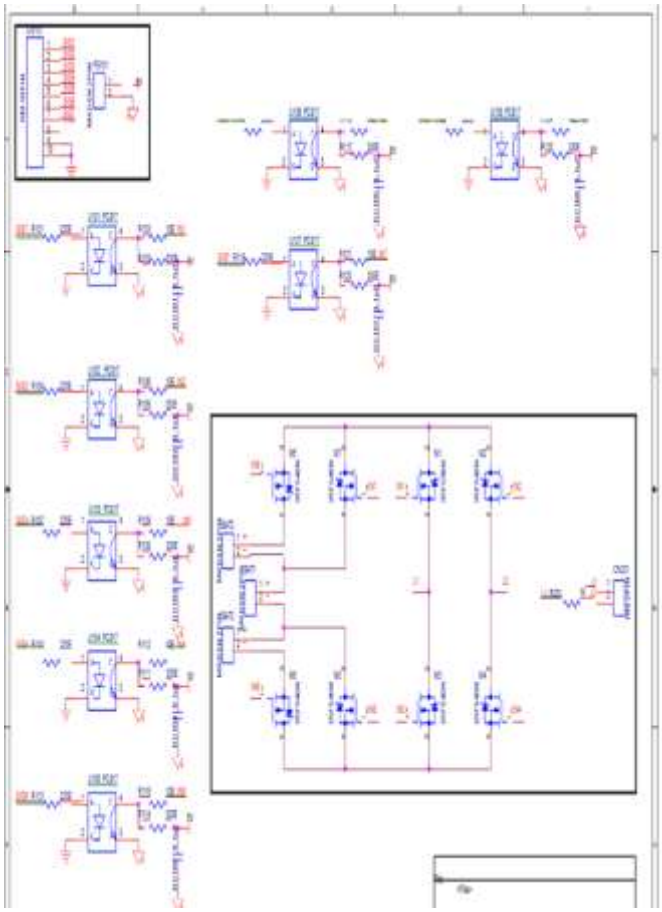

Fig 2. 7-level inverter of the new topology

Fig 3. seven level inverter circuit

IV. RESULT

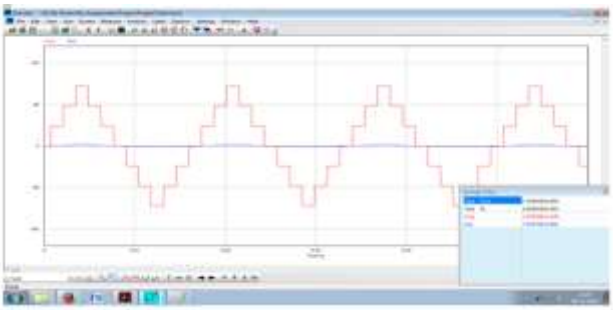

Fig 4. Output wave form

V. ACKNOWLEDGEMENT

I wish to express my profound thanks to all who helped us directly or indirectly in making this paper. Finally I wish to thank to all our friends and well-wishers who supported us in completing this paper successfully I am especially grateful to our guide for him time to time, very much needed, valuable guidance. Without the full support and cheerful encouragement of my guide, the paper would not have been completed on time.

VI. CONCLUSION

In this Paper Seven level inverter using low frequency transformers with single DC source is planned. The proposed structure is a compound of both bidirectional and unidirectional switches which have the advantage of using fewer IGBTs and driver circuits. It produces required seven level output voltage with low harmonics and reduced number of components compared to conventional methods. Harmonic spectrum for seven level output voltage is analyzed to prove its efficiency in reducing output harmonic components. Simulated and experimental output waveforms were shown to prove the consistency and possibility of the circuit.

REFERENCES

[1] R. A. Mastromauro, M. Liserre, and A. Dell'Aquila, "Control issues insingle-stage photovoltaic systems: MPPT, current and voltage control," *IEEE Trans. Ind. Informat.*, vol. 8, no. 2, pp. 241–254, May. 2012.

[2] Z. Zhao, M. Xu,Q. Chen, J. S. Jason Lai, andY. H. Cho, "Derivation, analysis, and implementation of a boost–buck converter-based high-efficiency pv inverter," *IEEE Trans. Power Electron.*, vol. 27, no. 3, pp. 1304–1313, Mar. 2012.

[3] John N. Chiasson, Leon M. Tolbert, Keith J. McKenzie, Zhong Du, " A Complete solution to the harmonic elimination problem", IEEE transactions on power electronics, Vol. 19, No.2, pp. 491-498, March 2004.

[4] V. G. Agelidis and M. Calais, "Application specific harmonic performance evaluation of multicarrier PWM techniques," in proc. IEEE PESC'98, vol. 1, 1998, pp. 172 – 178.

